NO	DESCRIPTION	SIZE	Q'TY	REMARKS
1	1843 REGULATOR	2"	1	A. M. C
2	FILTER (G1.0,HFA, 1MPa)	2"	1	SE JONG
3	PRESSURE GAUGE (0–0.1MPa)	ø100	1	WOO JIN
4	PRESSURE GAUGE (0–10kPa)	ø100	1	WOO JIN
5	BALL VALVE (1MPa)	2"	2	TAI YANG

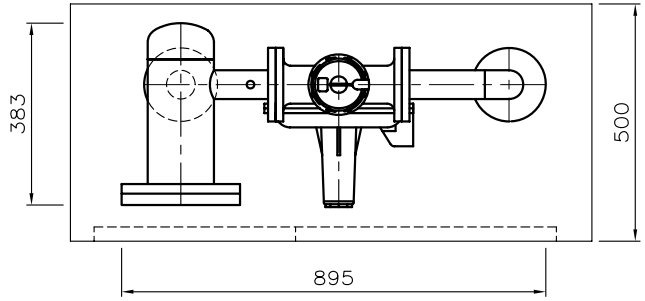

HOUSING

1.MAT'L:SUS 304 1.0t
2.SIZE:1100Lx550Wx900H
3.DOOR:전면 1개소

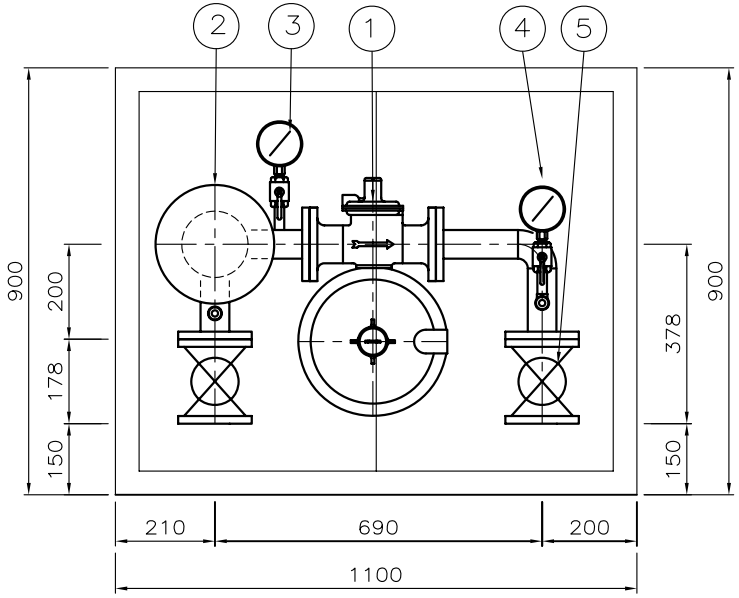

INLET 2"

OUTLET 2"

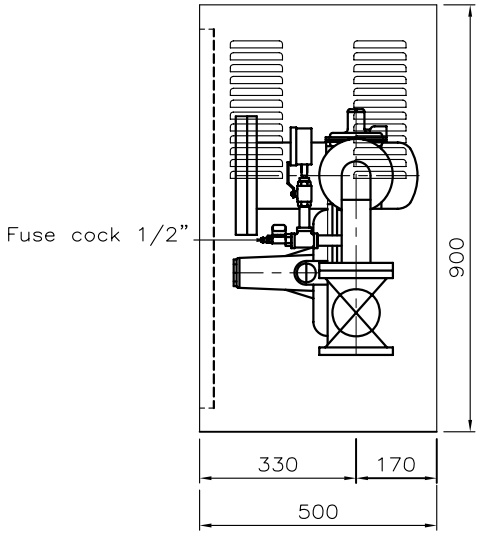

DWG: K.S.K	PROJECT TITLE					DATE	SCALE	P/SCALE	DWG NO.
DES:	DATE	REVISION	DWG	DES	CHK	2005.09.26	1/10	A–2	SW1805221
CHK:						TITLE	1843–2B(S) REGULATOR STATION		
APPD:						SAMCO	世宗에이엠씨株式會社 SEJONG-AMC CORPORATION		